YASKAWA

VIPA System SLIO

FM | 050-1BS00 | Manual

HB300 | FM | 050-1BS00 | en | 17-27

SSI module - FM 050S

www.vipa.com/en/service-support/manuals

VIPA CONTROLS

VIPA GmbH
Ohmstr. 4
91074 Herzogenaurach
Telephone: 09132-744-0
Fax: 09132-744-1864
Email: info@vipa.com
Internet: www.vipa.com

Table of contents

1 General

1.1 Copyright © VIPA GmbH

All Rights Reserved

For permission to reproduce or distribute, please contact: VIPA, Gesellschaft für Visualisierung und Prozessautomatisierung mbH Ohmstraße 4, D-91074 Herzogenaurach, Germany

Tel.: +49 9132 744 -0

Fax.: +49 9132 744-1864

EMail: info@vipa.de

http://www.vipa.com

Every effort has been made to ensure that the information contained in this document was complete and accurate at the time of publishing. Nevertheless, the authors retain the right to modify the information.

This customer document describes all the hardware units and functions known at the present time. Descriptions may be included for units which are not present at the customer site. The exact scope of delivery is described in the respective purchase contract.

CE Conformity Declaration

Hereby, VIPA GmbH declares that the products and systems are in compliance with the essential requirements and other relevant provisions. Conformity is indicated by the CE marking affixed to the product.

Conformity Information

For more information regarding CE marking and Declaration of Conformity (DoC), please contact your local VIPA customer service organization.

Trademarks

Information product support

Contact your local VIPA Customer Service Organization representative if you wish to report errors or questions regarding the contents of this document. If you are unable to locate a customer service centre, contact VIPA as follows:

VIPA GmbH, Ohmstraße 4, 91074 Herzogenaurach, Germany

Telefax: +49 9132 744-1204

EMail: documentation@vipa.de

Technical support

Contact your local VIPA Customer Service Organization representative if you encounter problems with the product or have questions regarding the product. If you are unable to locate a customer service centre, contact VIPA as follows:

VIPA GmbH, Ohmstraße 4, 91074 Herzogenaurach, Germany

Tel.: +49 9132 744-1150 (Hotline)

EMail: support@vipa.de

1.2 About this manual

Objective and contents

This manual describes the FM 050-1BS00 of the System SLIO from VIPA. It contains a description of the construction, project implementation and usage.

Product	Order number	as of state: HW
FM 050S	050-1BS00	01

Target audience

The manual is targeted at users who have a background in automation technology.

Structure of the manual

The manual consists of chapters. Every chapter provides a self-contained description of a specific topic.

Guide to the document

The following guides are available in the manual:

- An overall table of contents at the beginning of the manual
- References with page numbers

Availability

The manual is available in:

- printed form, on paper
- in electronic form as PDF-file (Adobe Acrobat Reader)

Icons Headings

Important passages in the text are highlighted by following icons and headings:

DANGER!
Immediate or likely danger. Personal injury is possible.

CAUTION!
Damages to property is likely if these warnings are not heeded.

Supplementary information and useful tips.

1.3 Safety information

Applications conforming with specifications

The system is constructed and produced for:

- communication and process control
- general control and automation tasks
- industrial applications
- operation within the environmental conditions specified in the technical data
- installation into a cubicle

DANGER!
This device is not certified for applications in

– in explosive environments (EX-zone)

Documentation

The manual must be available to all personnel in the

- project design department
- installation department
- commissioning
- operation

CAUTION!
The following conditions must be met before using or commissioning the components described in this manual:

– Hardware modifications to the process control system should only be carried out when the system has been disconnected from power!
– Installation and hardware modifications only by properly trained personnel.
– The national rules and regulations of the respective country must be satisfied (installation, safety, EMC ...)

Disposal

National rules and regulations apply to the disposal of the unit!

2 Basics and mounting

2.1 Safety information for users

Handling of electrostatic sensitive modules

VIPA modules make use of highly integrated components in MOS-Technology. These components are extremely sensitive to over-voltages that can occur during electrostatic discharges. The following symbol is attached to modules that can be destroyed by electrostatic discharges.

The Symbol is located on the module, the module rack or on packing material and it indicates the presence of electrostatic sensitive equipment. It is possible that electrostatic sensitive equipment is destroyed by energies and voltages that are far less than the human threshold of perception. These voltages can occur where persons do not discharge themselves before handling electrostatic sensitive modules and they can damage components thereby, causing the module to become inoperable or unusable. Modules that have been damaged by electrostatic discharges can fail after a temperature change, mechanical shock or changes in the electrical load. Only the consequent implementation of protection devices and meticulous attention to the applicable rules and regulations for handling the respective equipment can prevent failures of electrostatic sensitive modules.

Shipping of modules

Modules must be shipped in the original packing material.

Measurements and alterations on electrostatic sensitive modules

When you are conducting measurements on electrostatic sensitive modules you should take the following precautions:

- Floating instruments must be discharged before use.
- Instruments must be grounded.

Modifying electrostatic sensitive modules you should only use soldering irons with grounded tips.

CAUTION!
Personnel and instruments should be grounded when working on electrostatic sensitive modules.

2.2 System conception

2.2.1 Overview

System SLIO is a modular automation system for assembly on a 35mm mounting rail. By means of the peripheral modules with 2, 4 or 8 channels this system may properly be adapted matching to your automation tasks. The wiring complexity is low, because the supply of the DC 24V power section is integrated to the backplane bus and defective modules may be replaced with standing wiring. By deployment of the power modules in contrasting colors within the system, further isolated areas may be defined for the DC 24V power section supply, respectively the electronic power supply may be extended with 2A.

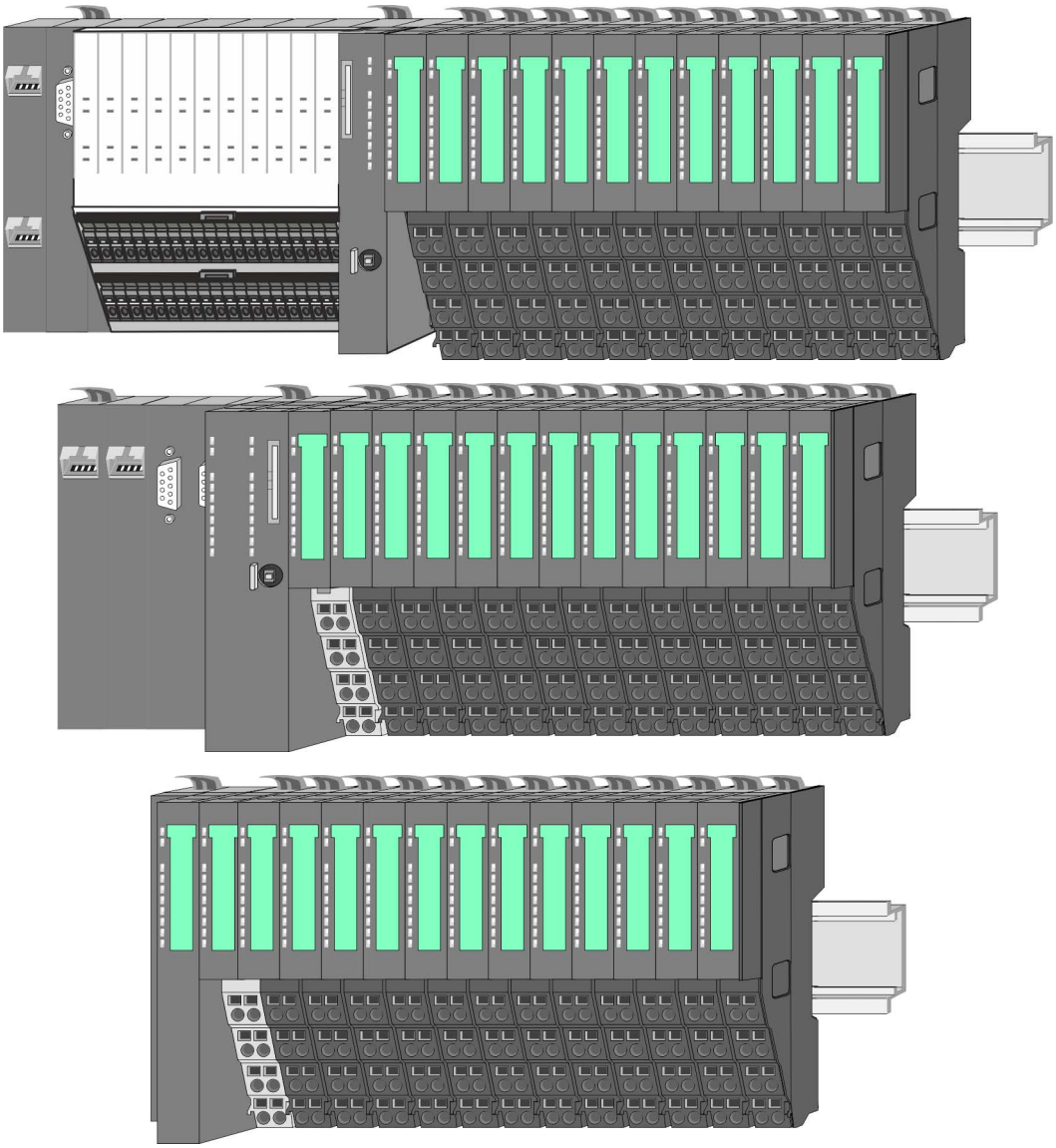

2.2.2 Components

- CPU (head module)
- Bus coupler (head module)
- Line extension
- Periphery modules
- Accessories

CAUTION!
Only modules of VIPA may be combined. A mixed operation with third-party modules is not allowed!

CPU 01xC

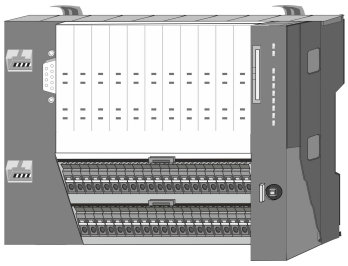

With this CPU 01xC, the CPU electronic, input/output components and power supply are integrated to one casing. In addition, up to 64 periphery modules of the System SLIO can be connected to the backplane bus. As head module via the integrated power supply CPU electronic and the I/O components are power supplied as well as the electronic of the connected periphery modules. To connect the power supply of the I/O components and for DC 24V power supply of via backplane bus connected peripheral modules, the CPU has removable connectors. By installing of up to 64 periphery modules at the backplane bus, these are electrically connected, this means these are assigned to the backplane bus, the electronic modules are power supplied and each periphery module is connected to the DC 24V power section supply.

CPU 01x

With this CPU 01x, the CPU electronic and power supply are integrated to one casing. As head module, via the integrated power module for power supply, CPU electronic and the electronic of the connected periphery modules are supplied. The DC 24 power section supply for the linked periphery modules is established via a further connection of the power module. By installing of up to 64 periphery modules at the backplane bus, these are electrically connected, this means these are assigned to the backplane bus, the electronic modules are power supplied and each periphery module is connected to the DC 24V power section supply.

CAUTION!
CPU part and power module may not be separated!

Here you may only exchange the electronic module!

Bus coupler

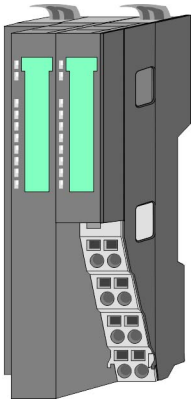

With a bus coupler bus interface and power module is integrated to one casing. With the bus interface you get access to a subordinated bus system. As head module, via the integrated power module for power supply, bus interface and the electronic of the connected periphery modules are supplied. The DC 24 power section supply for the linked periphery modules is established via a further connection of the power module. By installing of up to 64 periphery modules at the bus coupler, these are electrically connected, this means these are assigned to the backplane bus, the electronic modules are power supplied and each periphery module is connected to the DC 24V power section supply.

CAUTION!
Bus interface and power module may not be separated!
Here you may only exchange the electronic module!

Line extension

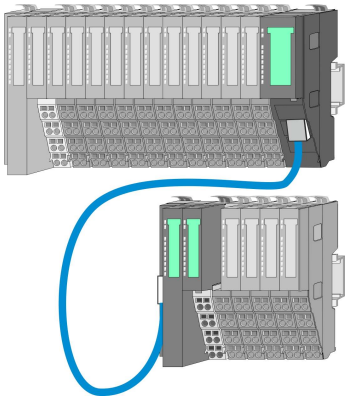

In the System SLIO there is the possibility to place up to 64 modules in on line. By means of the line extension you can divide this line into several lines. Here you have to place a line extension master at each end of a line and the subsequent line has to start with a line extension slave. Master and slave are to be connected via a special connecting cable. In this way, you can divide a line on up to 5 lines. For each line extension the maximum number of pluggable modules at the System SLIO bus is decreased by 1. To use the line extension no special configuration is required.

Periphery modules

Each periphery module consists of a *terminal* and an *electronic module*.

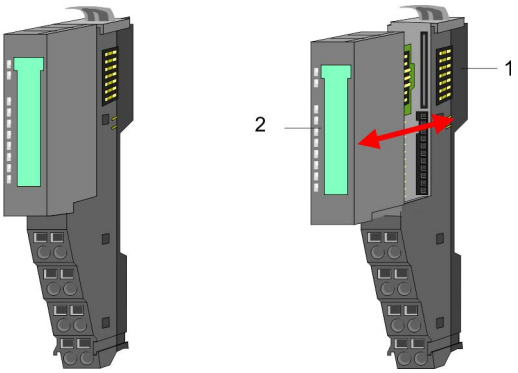

1 Terminal module
2 Electronic module

Terminal module

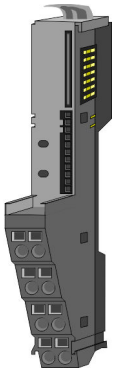

The *terminal* module serves to carry the electronic module, contains the backplane bus with power supply for the electronic, the DC 24V power section supply and the staircase-shaped terminal for wiring. Additionally the terminal module has a locking system for fixing at a mounting rail. By means of this locking system your SLIO system may be assembled outside of your switchgear cabinet to be later mounted there as whole system.

Electronic module

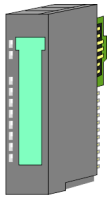

The functionality of a SLIO periphery module is defined by the *electronic* module, which is mounted to the terminal module by a sliding mechanism. With an error the defective module may be exchanged for a functional module with standing installation. At the front side there are LEDs for status indication. For simple wiring each module shows a corresponding connection diagram at the front and at the side.

2.2.3 Accessories

Shield bus carrier

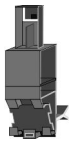

The shield bus carrier (order no.: 000-0AB00) serves to carry the shield bus (10mm x 3mm) to connect cable shields. Shield bus carriers, shield bus and shield fixings are not in the scope of delivery. They are only available as accessories. The shield bus carrier is mounted underneath the terminal of the terminal module. With a flat mounting rail for adaptation to a flat mounting rail you may remove the spacer of the shield bus carrier.

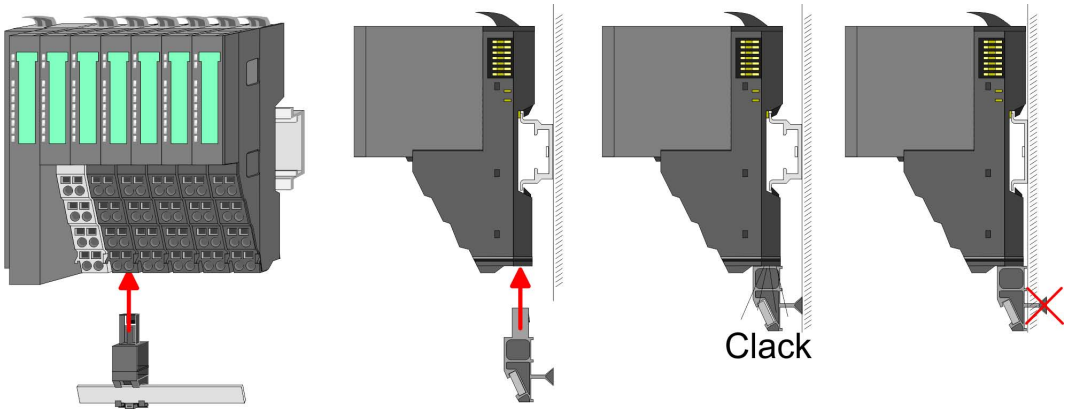

Bus cover

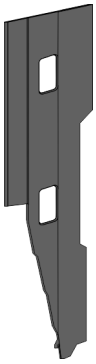

With each head module, to protect the backplane bus connectors, there is a mounted bus cover in the scope of delivery. You have to remove the bus cover of the head module before mounting a System SLIO module. For the protection of the backplane bus connector you always have to mount the bus cover at the last module of your system again. The bus cover has the order no. 000-0AA00.

Coding pins

There is the possibility to fix the assignment of electronic and terminal module. Here coding pins (order number 000-0AC00) from VIPA can be used. The coding pin consists of a coding jack and a coding plug. By combining electronic and terminal module with coding pin, the coding jack remains in the electronic module and the coding plug in the terminal module. This ensures that after replacing the electronics module just another electronic module can be plugged with the same encoding.

2.3 Dimensions

Dimensions CPU 01xC

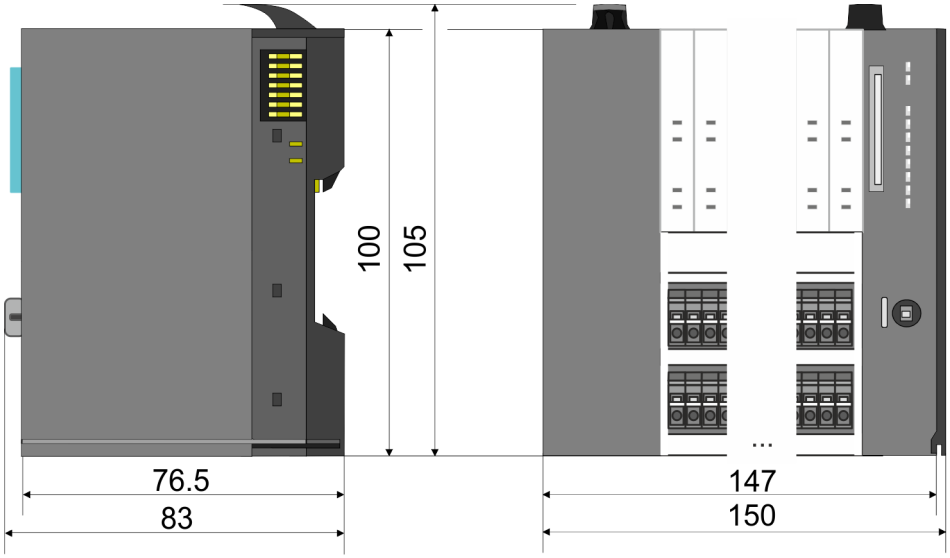

Dimensions CPU 01x

Dimensions bus coupler and line extension slave

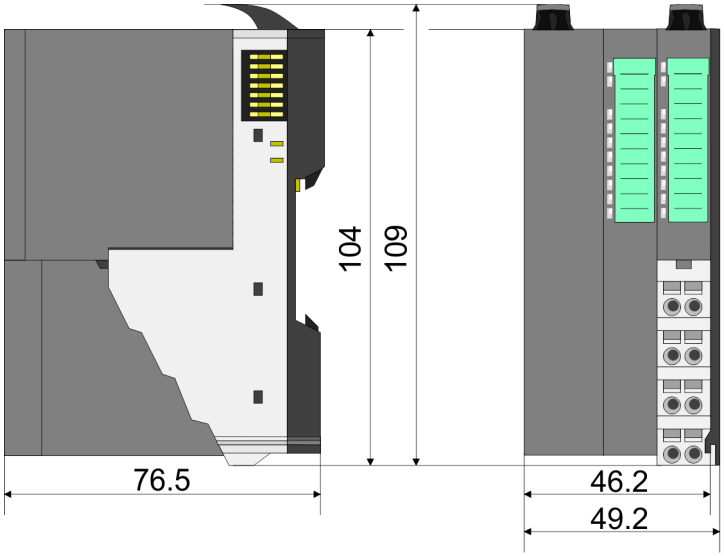

Dimensions line extension master

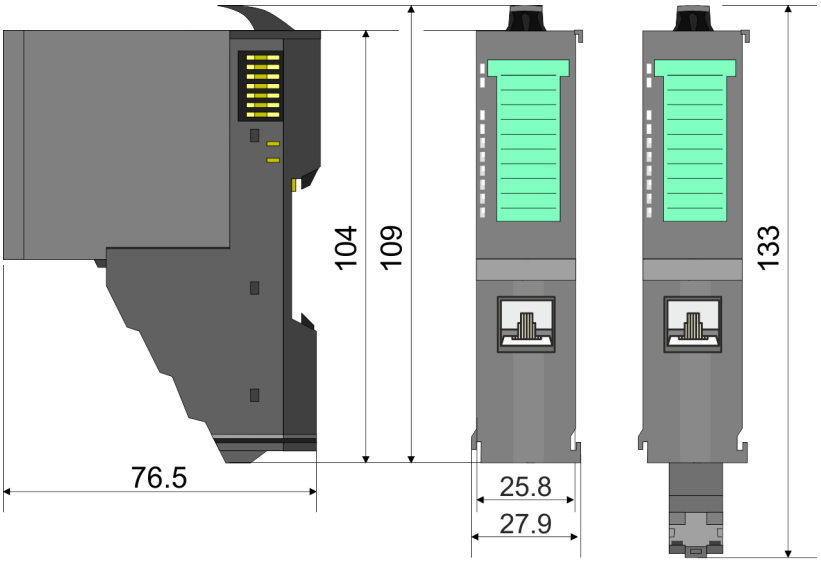

Dimension periphery module

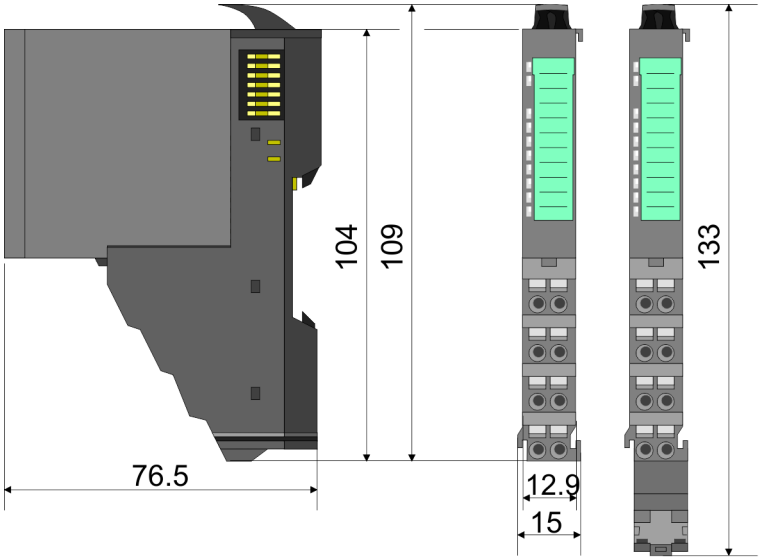

Dimensions electronic module

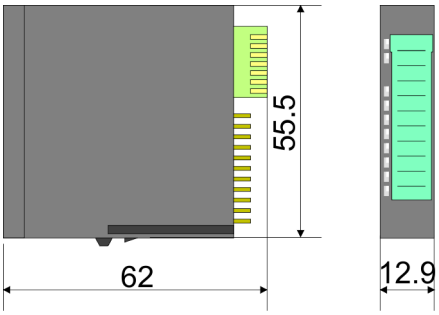

Dimensions in mm

2.4 Mounting periphery modules

Requirements for UL compliance use

- *Use for power supply exclusively SELV/PELV power supplies.*
- *The System SLIO must be installed and operated in a housing according to IEC 61010-1 9.3.2 c).*

There is a locking lever at the top side of the module. For mounting and demounting this locking lever is to be turned upwards until this engages. For mounting place the module to the module installed before and push the module to the mounting rail guided by the strips at the upper and lower side of the module. The module is fixed to the mounting rail by pushing downward the locking lever. The modules may either separately be mounted to the mounting rail or as block. Here is to be considered that each locking lever is opened. The modules are each installed on a mounting rail. The electronic and power section supply are connected via the backplane bus. Up to 64 modules may be mounted. Please consider here that the sum current of the electronic power supply does not exceed the maximum value of 3A. By means of the power module 007-1AB10 the current of the electronic power supply may be expanded accordingly.

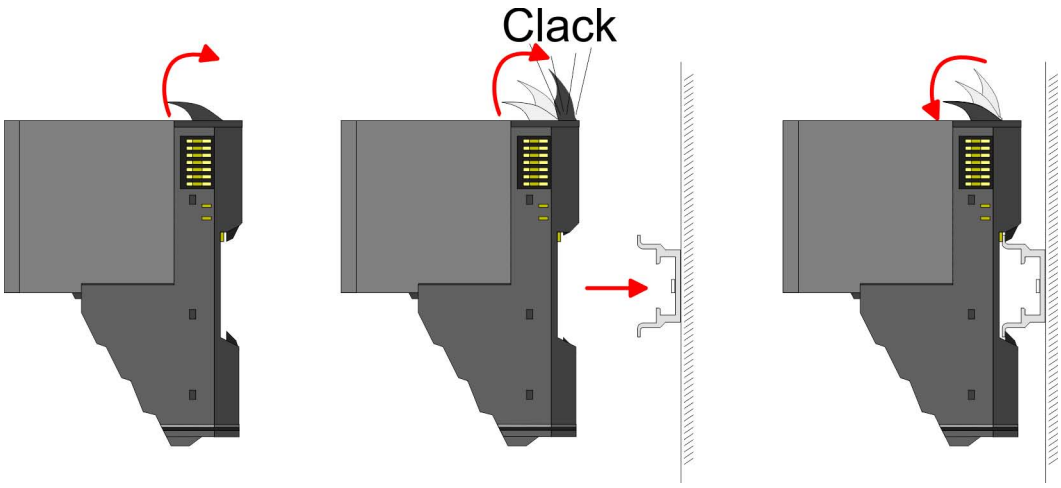

Terminal and electronic module

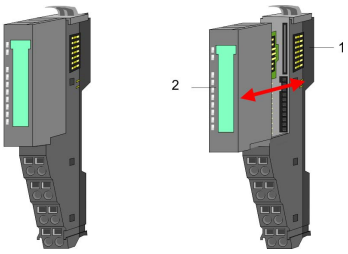

Each periphery module consists of a *terminal* and an *electronic module*.

1 Terminal module
2 Electronic module

For the exchange of a electronic module, the electronic module may be pulled forward after pressing the unlocking lever at the lower side of the module. For installation plug the electronic module guided by the strips at the lower side until this engages audible to the terminal module.

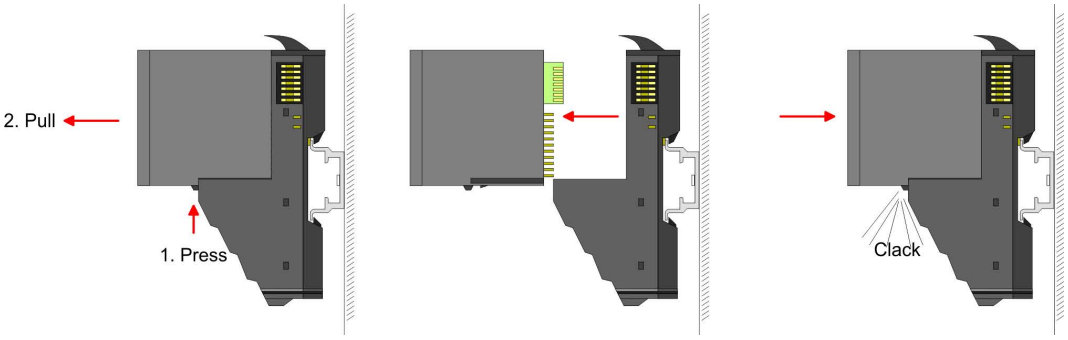

Coding

There is the possibility to fix the assignment of electronic and terminal module. Here coding pins (order number 000-0AC00) from VIPA can be used. The coding pin consists of a coding jack and a coding plug. By combining electronic and terminal module with coding pin, the coding jack remains in the electronic module and the coding plug in the terminal module. This ensures that after replacing the electronics module just another electronic module can be plugged with the same encoding.

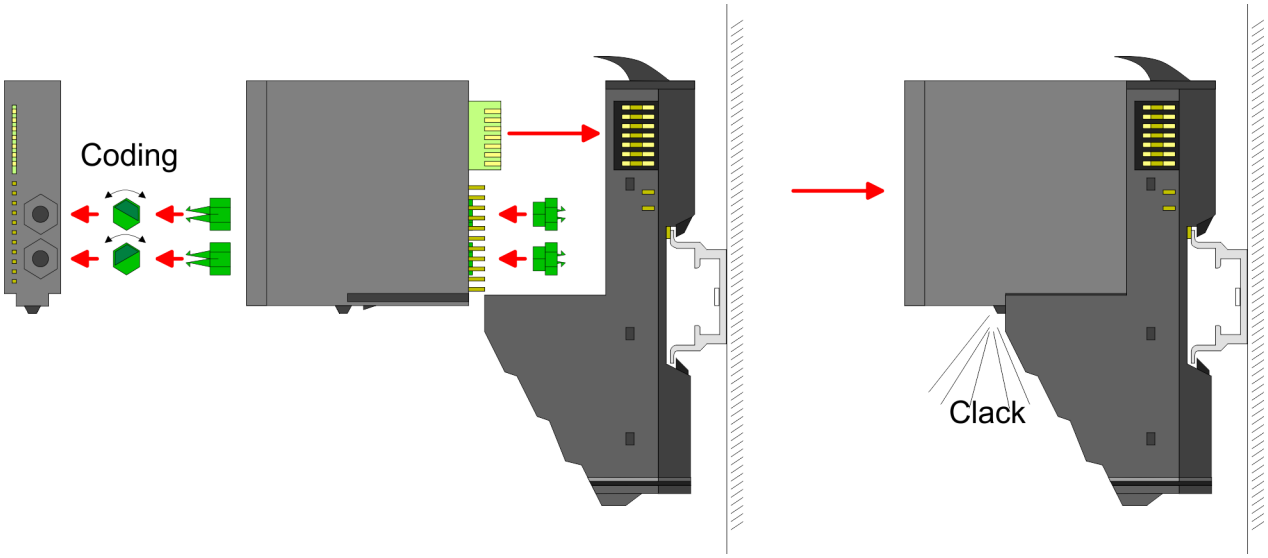

Each electronic module has on its back 2 coding sockets for coding jacks. Due to the characteristics, with the coding jack 6 different positions can be plugged, each. Thus there are 36 possible combinations for coding with the use of both coding sockets.

1. Plug, according to your coding, 2 coding jacks in the coding sockets of your electronic module until they lock
2. Now plug the according coding plugs into the coding jacks.
3. To fix the coding put both the electronic and terminal module together until they lock

CAUTION!
Please consider that when replacing an already coded electronic module, this is always be replaced by an electronic module with the same coding.

Even with an existing coding on the terminal module, you can plug an electronic module without coding. The user is responsible for the correct usage of the coding pins. VIPA assumes no liability for incorrectly attached electronic modules or for damages which arise due to incorrect coding!

Mounting periphery modules

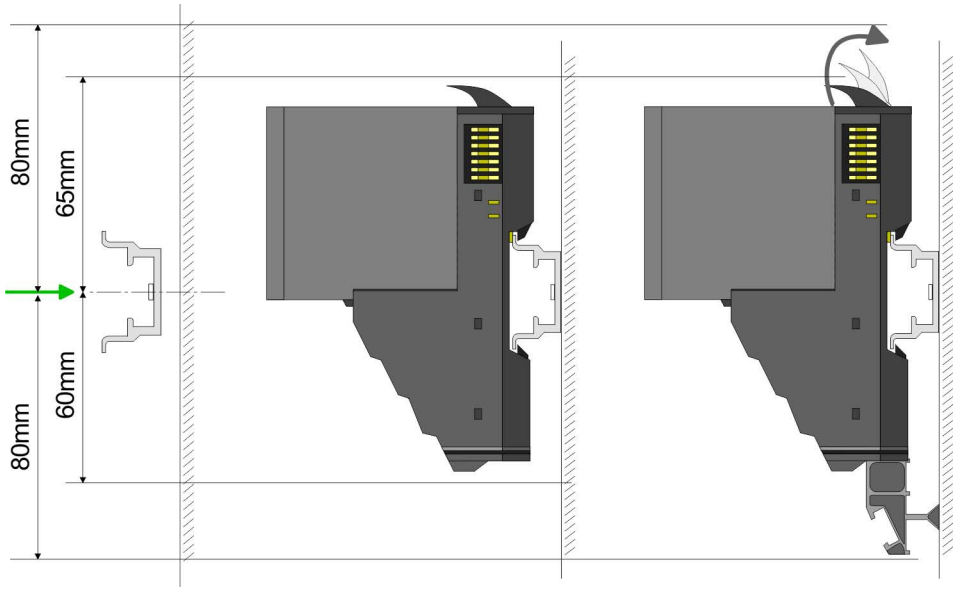

1. Mount the mounting rail! Please consider that a clearance from the middle of the mounting rail of at least 80mm above and 60mm below, respectively 80mm by deployment of shield bus carriers, exist.
2. Mount your head module such as CPU or field bus coupler.
3. Before mounting the periphery modules you have to remove the bus cover at the right side of the Head module by pulling it forward. Keep the cover for later mounting.

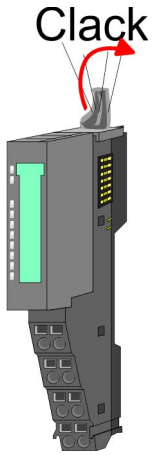

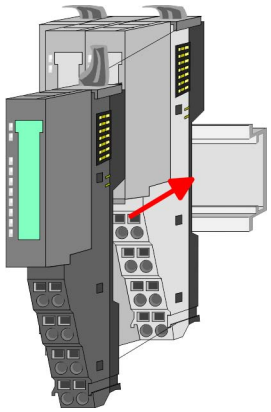

4. For mounting turn the locking lever of the module upward until it engages.
5. For mounting place the module to the module installed before and push the module to the mounting rail guided by the strips at the upper and lower side of the module.
6. Turn the locking lever of the periphery module downward, again.

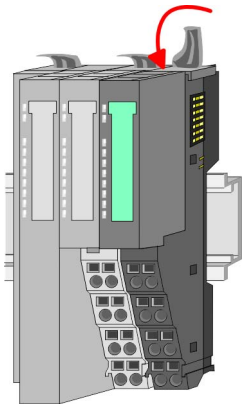

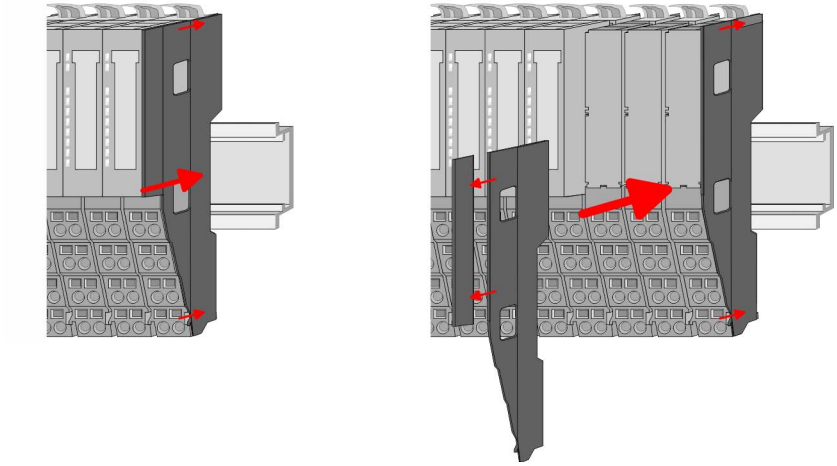

7. After mounting the whole system, to protect the backplane bus connectors at the last module you have to mount the bus cover, now. If the last module is a clamp module, for adaptation the upper part of the bus cover is to be removed.

2.5 Wiring periphery modules

Terminal module terminals

CAUTION!
Do not connect hazardous voltages!
If this is not explicitly stated in the corresponding module description, hazardous voltages are not allowed to be connected to the corresponding terminal module!

With wiring the terminal modules, terminals with spring clamp technology are used for wiring. The spring clamp technology allows quick and easy connection of your signal and supply lines. In contrast to screw terminal connections this type of connection is vibration proof.

Data

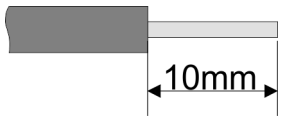

U_{max}	240V AC / 30V DC
I_{max}	10A
Cross section	0.08 ... 1.5mm^2 (AWG 28 ... 16)
Stripping length	10mm

Wiring procedure

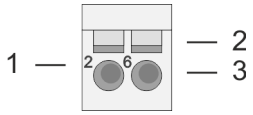

1 Pin number at the connector
2 Opening for screwdriver
3 Connection hole for wire

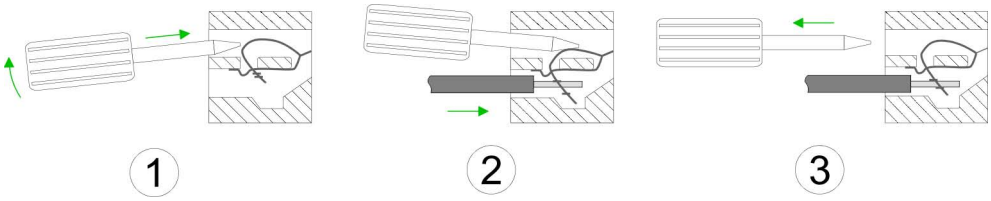

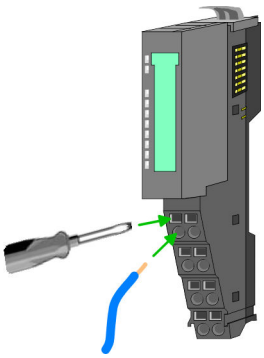

1. Insert a suited screwdriver at an angel into the square opening as shown. Press and hold the screwdriver in the opposite direction to open the contact spring.
2. Insert the stripped end of wire into the round opening. You can use wires with a cross section of 0.08mm^2 up to 1.5mm^2
3. By removing the screwdriver, the wire is securely fixed via the spring contact to the terminal.

Shield attachment

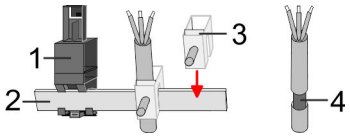

1 Shield bus carrier
2 Shield bus (10mm x 3mm)
3 Shield clamp
4 Cable shield

To attach the shield the mounting of shield bus carriers are necessary. The shield bus carrier (available as accessory) serves to carry the shield bus to connect cable shields.

1. Each System SLIO module has a carrier hole for the shield bus carrier. Push the shield bus carrier, until they engage into the module. With a flat mounting rail for adaptation to a flat mounting rail you may remove the spacer of the shield bus carrier.
2. Put your shield bus into the shield bus carrier.

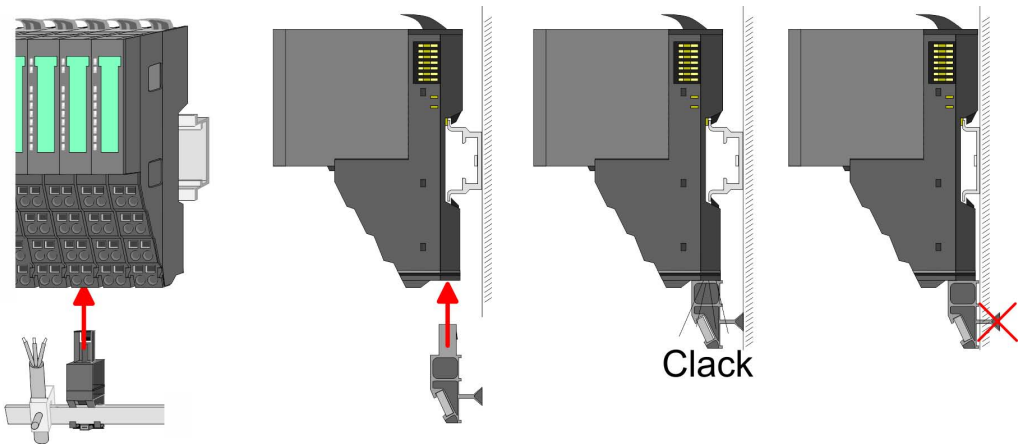

3. Attach the cables with the accordingly stripped cable screen and fix it by the shield clamp with the shield bus.

2.6 Wiring power modules

Terminal module terminals

Power modules are either integrated to the head module or may be installed between the periphery modules. With power modules, terminals with spring clamp technology are used for wiring. The spring clamp technology allows quick and easy connection of your signal and supply lines. In contrast to screw terminal connections this type of connection is vibration proof.

Data

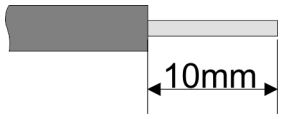

U_{max}	240V AC / 30V DC
I_{max}	10A
Cross section	0.08 ... 1.5mm^2 (AWG 28 ... 16)
Stripping length	10mm

Wiring procedure

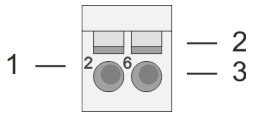

1 Pin number at the connector
2 Opening for screwdriver
3 Connection hole for wire

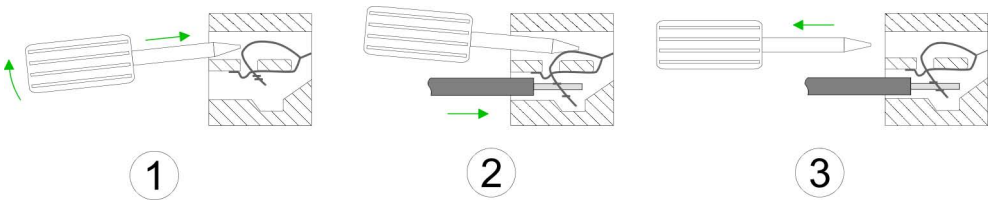

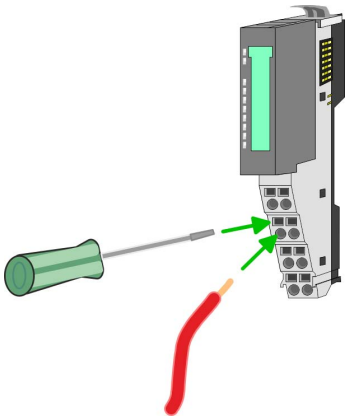

1. Insert a suited screwdriver at an angel into the square opening as shown. Press and hold the screwdriver in the opposite direction to open the contact spring.
2. Insert the stripped end of wire into the round opening. You can use wires with a cross section of 0.08mm^2 up to 1.5mm^2
3. By removing the screwdriver, the wire is securely fixed via the spring contact to the terminal.

Standard wiring

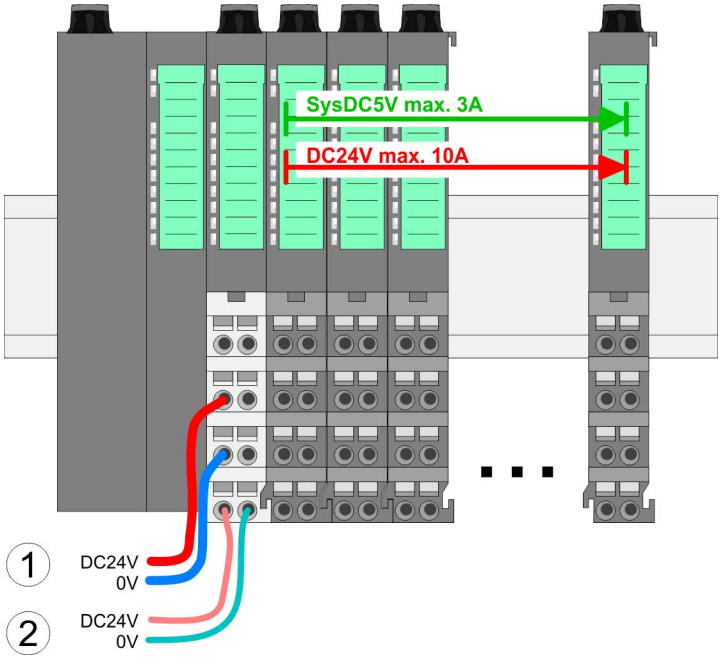

(1) DC 24V for power section supply I/O area (max. 10A)
(2) DC 24V for electronic power supply bus coupler and I/O area

PM - Power module

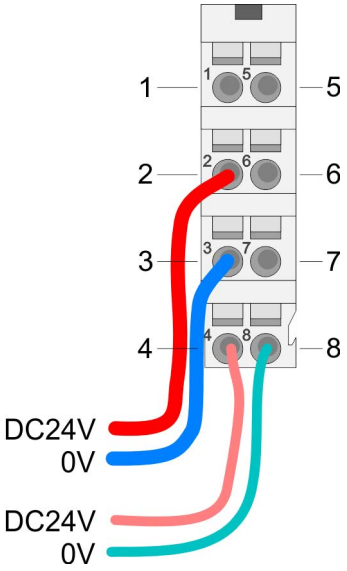

For wires with a core cross-section of 0.08mm² up to 1.5mm².

Pos.	Function	Type	Description
1	---	---	not connected
2	DC 24V	I	DC 24V for power section supply
3	0V	I	GND for power section supply
4	Sys DC 24V	I	DC 24V for electronic section supply
5	---	---	not connected
6	DC 24V	I	DC 24V for power section supply
7	0V	I	GND for power section supply
8	Sys 0V	I	GND for electronic section supply

I: Input

CAUTION!
Since the power section supply is not internally protected, it is to be externally protected with a fuse, which corresponds to the maximum current. This means max. 10A is to be protected by a 10A fuse (fast) respectively by a line circuit breaker 10A characteristics Z!

The electronic power section supply is internally protected against higher voltage by fuse. The fuse is within the power module. If the fuse releases, its electronic module must be exchanged!

Fusing

- The power section supply is to be externally protected with a fuse, which corresponds to the maximum current. This means max. 10A is to be protected with a 10A fuse (fast) respectively by a line circuit breaker 10A characteristics Z!
- It is recommended to externally protect the electronic power supply for head modules and I/O area with a 2A fuse (fast) respectively by a line circuit breaker 2A characteristics Z.
- The electronic power supply for the I/O area of the power module 007-1AB10 should also be externally protected with a 1A fuse (fast) respectively by a line circuit breaker 1A characteristics Z.

State of the electronic power supply via LEDs

After PowerON of the System SLIO the LEDs RUN respectively MF get on so far as the sum current does not exceed 3A. With a sum current greater than 3A the LEDs may not be activated. Here the power module with the order number 007-1AB10 is to be placed between the peripheral modules.

Deployment of the power modules

- If the 10A for the power section supply is no longer sufficient, you may use the power module from VIPA with the order number 007-1AB00. So you have also the possibility to define isolated groups.
- The power module with the order number 007-1AB10 is to be used if the 3A for the electronic power supply at the backplane bus is no longer sufficient. Additionally you get an isolated group for the DC 24V power section supply with max. 4A.
- By placing the power module 007-1AB10 at the following backplane bus modules may be placed with a sum current of max. 2A. Afterwards a power module is to be placed again. To secure the power supply, the power modules may be mixed used.

Power module 007-1AB00

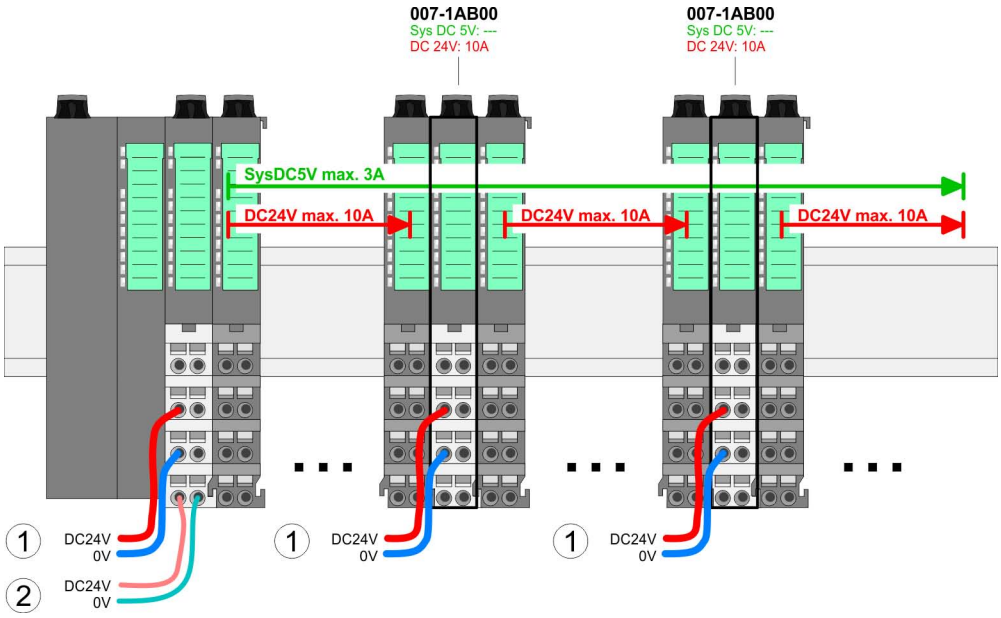

Power module 007-1AB10

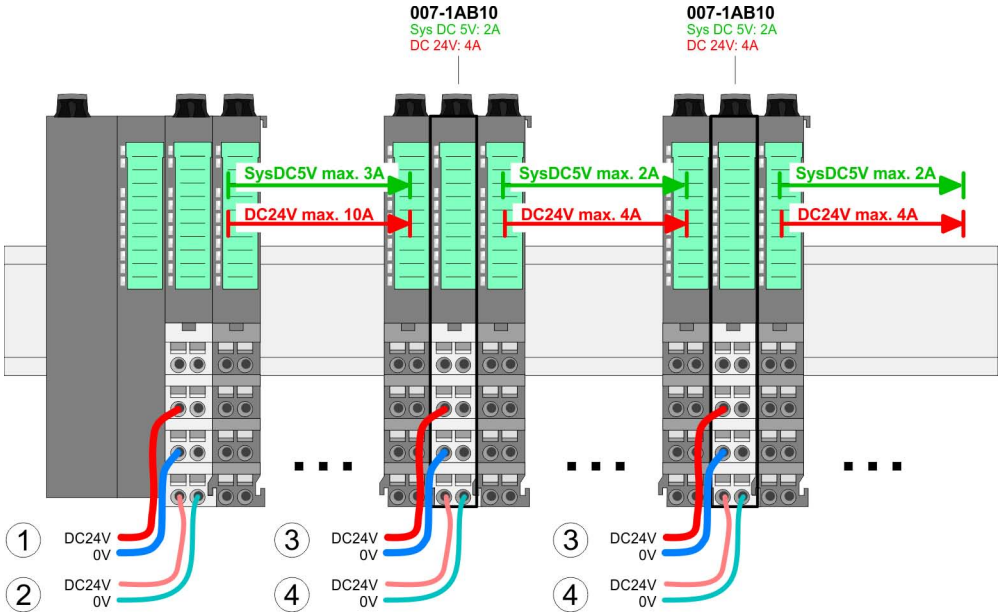

(1) DC 24V for power section supply I/O area (max. 10A)
(2) DC 24V for electronic power supply bus coupler and I/O area
(3) DC 24V for power section supply I/O area (max. 4A)
(4) DC 24V for electronic power supply I/O area

Shield attachment

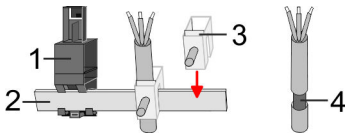

1 Shield bus carrier
2 Shield bus (10mm x 3mm)
3 Shield clamp
4 Cable shield

To attach the shield the mounting of shield bus carriers are necessary. The shield bus carrier (available as accessory) serves to carry the shield bus to connect cable shields.

1. Each System SLIO module has a carrier hole for the shield bus carrier. Push the shield bus carrier, until they engage into the module. With a flat mounting rail for adaptation to a flat mounting rail you may remove the spacer of the shield bus carrier.

2. Put your shield bus into the shield bus carrier.

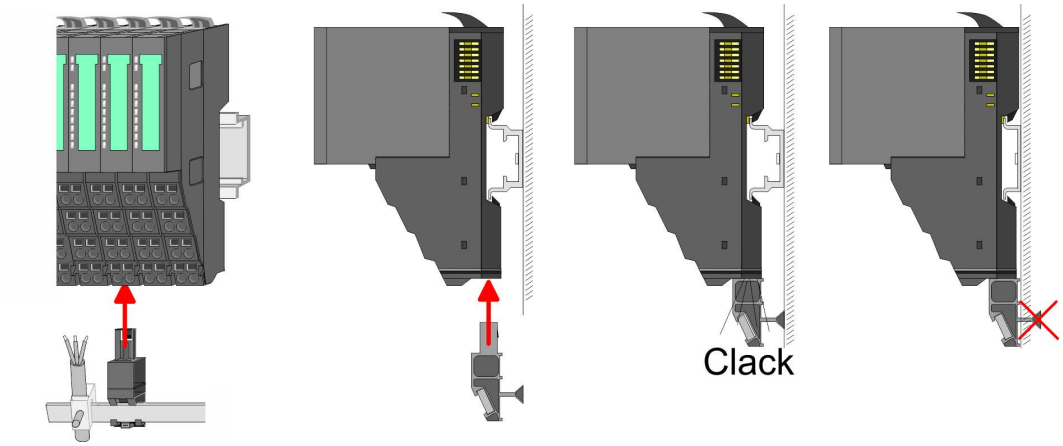

3. Attach the cables with the accordingly stripped cable screen and fix it by the shield clamp with the shield bus.

2.7 Demounting periphery modules

Proceeding

Exchange of an electronic module

1. Power-off your system.

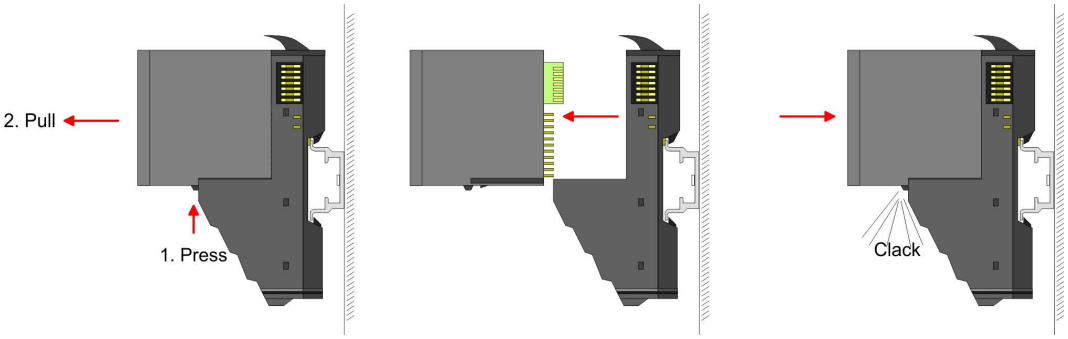

2. For the exchange of a electronic module, the electronic module may be pulled forward after pressing the unlocking lever at the lower side of the module.
3. For installation plug the new electronic module guided by the strips at the lower side until this engages to the terminal module.

   ⇨ Now you can bring your system back into operation.

Exchange of a periphery module

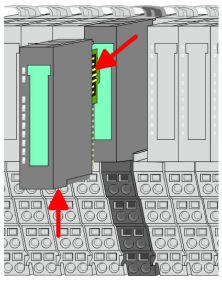

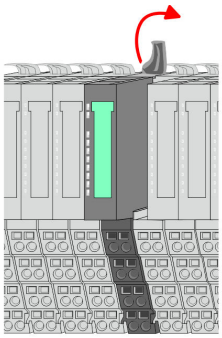

1. Power-off your system.
2. Remove if exists the wiring of the module.
3. *For demounting and exchange of a (head) module or a group of modules, due to mounting reasons you always have to remove the electronic module right beside. After mounting it may be plugged again.*

   Press the unlocking lever at the lower side of the just mounted right module and pull it forward.
4. Turn the locking lever of the module to be exchanged upwards.

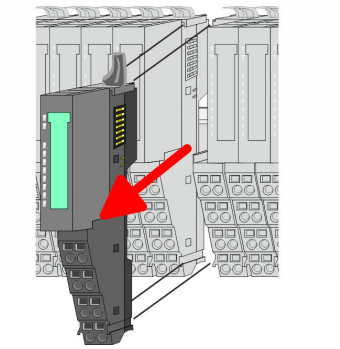

5. Pull the module.
6. For mounting turn the locking lever of the module to be mounted upwards.

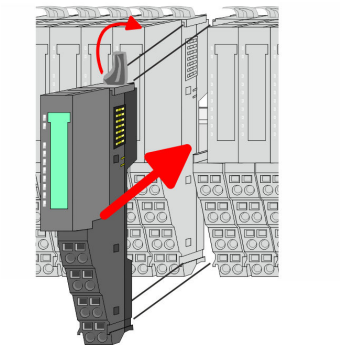

7. To mount the module put it to the gap between the both modules and push it, guided by the stripes at both sides, to the mounting rail.
8. Turn the locking lever downward, again.

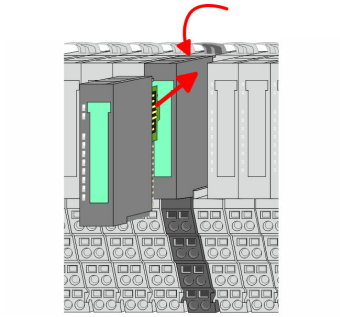

9. Plug again the electronic module, which you have removed before.
10. Wire your module.

    ⇨ Now you can bring your system back into operation.

Exchange of a module group

1. Power-off your system.
2. Remove if exists the wiring of the module group.
3. *For demounting and exchange of a (head) module or a group of modules, due to mounting reasons you always have to remove the electronic module right beside. After mounting it may be plugged again.*

   Press the unlocking lever at the lower side of the just mounted right module near the module group and pull it forward.

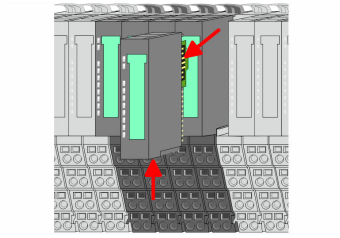

4. Turn all the locking lever of the module group to be exchanged upwards.

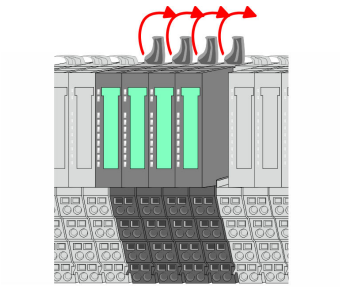

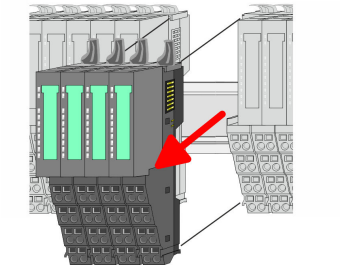

5. Pull the module group forward.

6. For mounting turn all the locking lever of the module group to be mounted upwards.

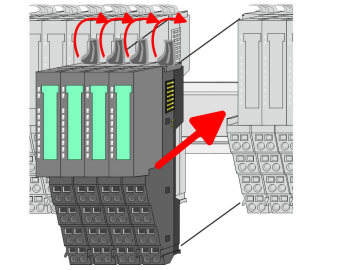

7. To mount the module group put it to the gap between the both modules and push it, guided by the stripes at both sides, to the mounting rail.

8. Turn all the locking lever downward, again.

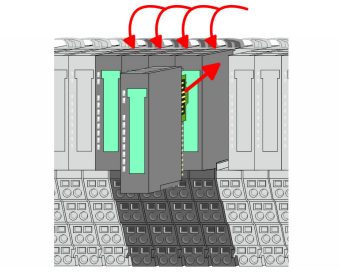

9. Plug again the electronic module, which you have removed before.

10. Wire your module group.

⇨ Now you can bring your system back into operation.

2.8 Trouble shooting - LEDs

General

Each module has the LEDs RUN and MF on its front side. Errors or incorrect modules may be located by means of these LEDs.

In the following illustrations flashing LEDs are marked by ☼.

Sum current of the electronic power supply exceeded

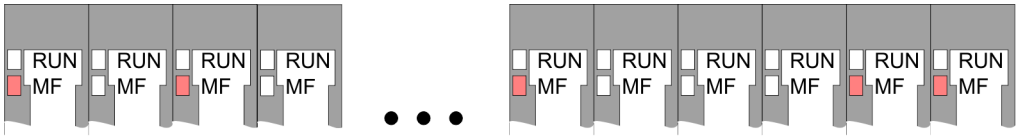

Behaviour: After PowerON the RUN LED of each module is off and the MF LED of each module is sporadically on.

Reason: The maximum current for the electronic power supply is exceeded.

Remedy: As soon as the sum current of the electronic power supply is exceeded, always place the power module 007-1AB10. ↳ *Chapter 2.6 'Wiring power modules' on page 20*

Error in configuration

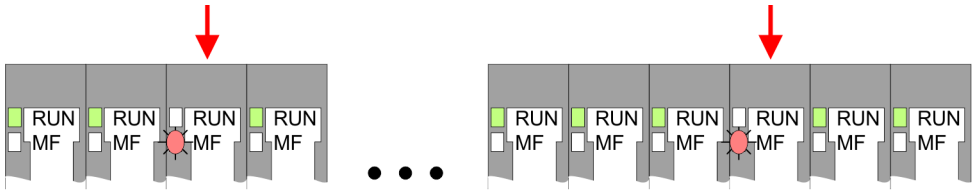

Behaviour: After PowerON the MF LED of one module respectively more modules flashes. The RUN LED remains off.

Reason: At this position a module is placed, which does not correspond to the configured module.

Remedy: Match configuration and hardware structure.

Module failure

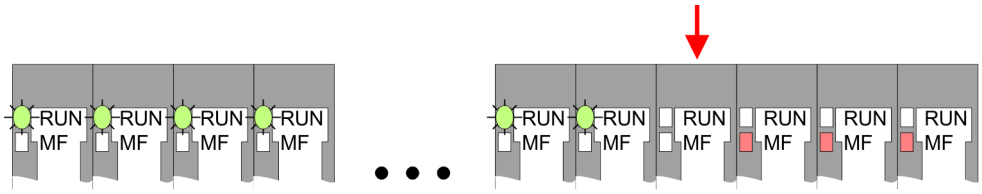

Behaviour: After PowerON all of the RUN LEDs up to the defective module are flashing. With all following modules the MF LED is on and the RUN LED is off.

Reason: The module on the right of the flashing modules is defective.

Remedy: Replace the defective module.

2.9 Installation guidelines

General

The installation guidelines contain information about the interference free deployment of a PLC system. There is the description of the ways, interference may occur in your PLC, how you can make sure the electromagnetic compatibility (EMC), and how you manage the isolation.

What does EMC mean?

Electromagnetic compatibility (EMC) means the ability of an electrical device, to function error free in an electromagnetic environment without being interfered respectively without interfering the environment.

The components of VIPA are developed for the deployment in industrial environments and meets high demands on the EMC. Nevertheless you should project an EMC planning before installing the components and take conceivable interference causes into account.

Possible interference causes

Electromagnetic interferences may interfere your control via different ways:

- Electromagnetic fields (RF coupling)
- Magnetic fields with power frequency
- Bus system
- Power supply
- Protected earth conductor

Depending on the spreading medium (lead bound or lead free) and the distance to the interference cause, interferences to your control occur by means of different coupling mechanisms.

There are:

- galvanic coupling
- capacitive coupling
- inductive coupling
- radiant coupling

Basic rules for EMC

In the most times it is enough to take care of some elementary rules to guarantee the EMC. Please regard the following basic rules when installing your PLC.

- Take care of a correct area-wide grounding of the inactive metal parts when installing your components.
  - Install a central connection between the ground and the protected earth conductor system.
  - Connect all inactive metal extensive and impedance-low.
  - Please try not to use aluminium parts. Aluminium is easily oxidizing and is therefore less suitable for grounding.
- When cabling, take care of the correct line routing.
  - Organize your cabling in line groups (high voltage, current supply, signal and data lines).
  - Always lay your high voltage lines and signal respectively data lines in separate channels or bundles.
  - Route the signal and data lines as near as possible beside ground areas (e.g. suspension bars, metal rails, tin cabinet).

- Proof the correct fixing of the lead isolation.
  - Data lines must be laid isolated.
  - Analog lines must be laid isolated. When transmitting signals with small amplitudes the one sided laying of the isolation may be favourable.
  - Lay the line isolation extensively on an isolation/protected earth conductor rail directly after the cabinet entry and fix the isolation with cable clamps.
  - Make sure that the isolation/protected earth conductor rail is connected impedance-low with the cabinet.
  - Use metallic or metallised plug cases for isolated data lines.
- In special use cases you should appoint special EMC actions.
  - Consider to wire all inductivities with erase links.
  - Please consider luminescent lamps can influence signal lines.
- Create a homogeneous reference potential and ground all electrical operating supplies when possible.
  - Please take care for the targeted employment of the grounding actions. The grounding of the PLC serves for protection and functionality activity.
  - Connect installation parts and cabinets with your PLC in star topology with the isolation/protected earth conductor system. So you avoid ground loops.
  - If there are potential differences between installation parts and cabinets, lay sufficiently dimensioned potential compensation lines.

Isolation of conductors

Electrical, magnetically and electromagnetic interference fields are weakened by means of an isolation, one talks of absorption. Via the isolation rail, that is connected conductive with the rack, interference currents are shunt via cable isolation to the ground. Here you have to make sure, that the connection to the protected earth conductor is impedance-low, because otherwise the interference currents may appear as interference cause.

When isolating cables you have to regard the following:

- If possible, use only cables with isolation tangle.
- The hiding power of the isolation should be higher than 80%.
- Normally you should always lay the isolation of cables on both sides. Only by means of the both-sided connection of the isolation you achieve high quality interference suppression in the higher frequency area. Only as exception you may also lay the isolation one-sided. Then you only achieve the absorption of the lower frequencies. A one-sided isolation connection may be convenient, if:
  - the conduction of a potential compensating line is not possible.
  - analog signals (some mV respectively µA) are transferred.
  - foil isolations (static isolations) are used.
- With data lines always use metallic or metallised plugs for serial couplings. Fix the isolation of the data line at the plug rack. Do not lay the isolation on the PIN 1 of the plug bar!
- At stationary operation it is convenient to strip the insulated cable interruption free and lay it on the isolation/protected earth conductor line.
- To fix the isolation tangles use cable clamps out of metal. The clamps must clasp the isolation extensively and have well contact.
- Lay the isolation on an isolation rail directly after the entry of the cable in the cabinet. Lead the isolation further on to your PLC and don't lay it on there again!

CAUTION!

Please regard at installation!

At potential differences between the grounding points, there may be a compensation current via the isolation connected at both sides.

Remedy: Potential compensation line

2.10 General data

Conformity and approval		
Conformity		
CE	2014/35/EU	Low-voltage directive
	2014/30/EU	EMC directive
Approval		
UL	-	Refer to Technical data
others		
RoHS	2011/65/EU	Restriction of the use of certain hazardous substances in electrical and electronic equipment

Protection of persons and device protection		
Type of protection	-	IP20
Electrical isolation		
to the field bus	-	electrically isolated
to the process level	-	electrically isolated
Insulation resistance	-	-
Insulation voltage to reference earth		
Inputs / outputs	-	AC / DC 50V, test voltage AC 500V
Protective measures	-	against short circuit

Environmental conditions to EN 61131-2		
Climatic		
Storage / transport	EN 60068-2-14	-25…+70°C
Operation		
Horizontal installation hanging	EN 61131-2	0…+60°C
Horizontal installation lying	EN 61131-2	0…+55°C
Vertical installation	EN 61131-2	0…+50°C
Air humidity	EN 60068-2-30	RH1 (without condensation, rel. humidity 10…95%)
Pollution	EN 61131-2	Degree of pollution 2
Installation altitude max.	-	2000m
Mechanical		
Oscillation	EN 60068-2-6	1g, 9Hz ... 150Hz
Shock	EN 60068-2-27	15g, 11ms

Mounting conditions		
Mounting place	-	In the control cabinet
Mounting position	-	Horizontal and vertical

EMC	Standard		Comment
Emitted interference	EN 61000-6-4		Class A (Industrial area)
Noise immunity zone B	EN 61000-6-2		Industrial area
		EN 61000-4-2	ESD 8kV at air discharge (degree of severity 3), 4kV at contact discharge (degree of severity 2)
		EN 61000-4-3	HF field immunity (casing) 80MHz … 1000MHz, 10V/m, 80% AM (1kHz) 1.4GHz ... 2.0GHz, 3V/m, 80% AM (1kHz) 2GHz ... 2.7GHz, 1V/m, 80% AM (1kHz)
		EN 61000-4-6	HF conducted 150kHz … 80MHz, 10V, 80% AM (1kHz)
		EN 61000-4-4	Burst, degree of severity 3
		EN 61000-4-5	Surge, degree of severity 3 *

*) Due to the high-energetic single pulses with Surge an appropriate external protective circuit with lightning protection elements like conductors for lightning and overvoltage is necessary.

3 Hardware description

3.1 Properties

Features

- 1xSSI for absolute-value encoder with 8...32bit, 125kHz...2MHz
- Connecting by difference signal (RS422)
- Clock output for master mode
- Clock input for listening mode
- Encoder power supply DC 24V
- integrated transformer for gray/dual
- asynchronous encoder evaluation
- Normalization of the encoder value, this means added bits are removed
- Interrupt and diagnostics function with µs time stamp
- µs time stamp for encoder value (e.g. for speed calculation)

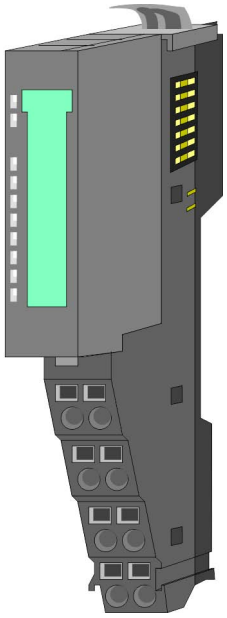

Order data

Type	Order number	Description
FM 050S	050-1BS00	SSI-Module

3.2 Structure

050-1BS00

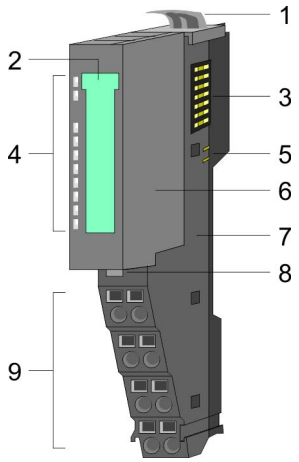

1 Locking lever terminal module
2 Labeling strip
3 Backplane bus
4 LED status indication
5 DC 24V power section supply
6 Electronic module
7 Terminal module
8 Locking lever electronic module
9 Terminal

Status indication

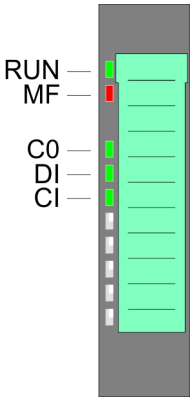

RUN green	MF red	Description
green		Bus communication is OK Module status is OK
green	red	Bus communication is OK Module status reports an error
	red	Bus communication is not possible Module status reports an error
		Error at bus power supply
X	2Hz	Error in configuration *Chapter 2.8 'Trouble shooting - LEDs' on page 28*
CO	green	Clock OUT activity
DI	green	Data IN activity
CI	green	Clock IN activity
not relevant: X		

Pin assignment

For wires with a cross section of 0.08mm² up to 1.5mm².

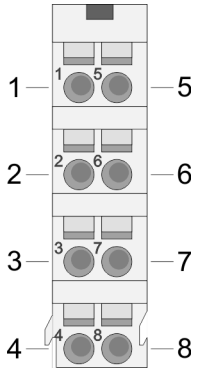

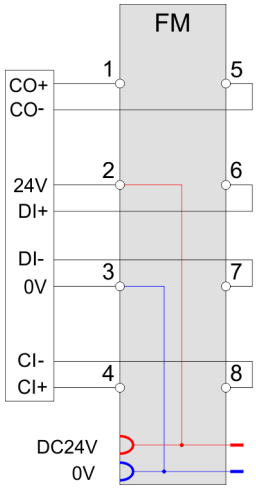

Pos.	Function	Type	Description
1	CO+	O	Clock OUT+ Difference output for Clock OUT (exclusively for master mode)
2	DC 24V	O	DC 24V for encoder
3	0V	O	GND
4	CI+	I	Clock IN+ Difference input for Clock IN (exclusively for listening mode)
5	CO-	O	Clock OUT- Difference output for Clock OUT (exclusively for master mode)
6	DI+	I	Data IN+ Difference input for Data IN
7	DI-	I	Data IN- Difference input for Data IN
8	CI-	I	Clock IN- Difference input for Clock IN(exclusively for listening mode)

I: Input, O: Output

3.3 Technical data

Order no.	050-1BS00
Type	FM 050
Module ID	09C1 7800
Current consumption/power loss	
Current consumption from backplane bus	85 mA
Power loss	1 W
Parallel switching of outputs for increased power	-
Status information, alarms, diagnostics	
Status display	yes
Interrupts	yes, parameterizable
Process alarm	no
Diagnostic interrupt	yes, parameterizable
Diagnostic functions	yes, parameterizable
Diagnostics information read-out	possible
Module state	green LED
Module error display	red LED
Channel error display	none
Isolation	
Between channels	-
Between channels of groups to	-
Between channels and backplane bus	✓
Between channels and power supply	-
Max. potential difference between circuits	-
Max. potential difference between inputs (Ucm)	-
Max. potential difference between Mana and Mintern (Uiso)	-
Max. potential difference between inputs and Mana (Ucm)	-
Max. potential difference between inputs and Mintern (Uiso)	-
Max. potential difference between Mintern and outputs	-
Insulation tested with	DC 500 V
Technical data SSI	
Interfaces type	RS422
Encoder frequency / baud rate	parameterizable (125k, 250k, 500k, 1M, 1.5M, 2MHz)
SSI pause time	parameterizable (1, 2, 4, 8, 16, 32, 48, 64µs)
Normalization	parameterizable (0…15 Bit)
Bit length encoder data	parameterizable (8…32 Bit)

Order no.	050-1BS00
Mode master	✓
Mode monitoring operation	✓
Shift direction MSB first	✓
Shift direction LSB first	✓
Binary code	✓
Gray code	✓
Datasizes	
Input bytes	6
Output bytes	0
Parameter bytes	17
Diagnostic bytes	20
Housing	
Material	PPE / PPE GF10
Mounting	Profile rail 35 mm
Mechanical data	
Dimensions (WxHxD)	12.9 mm x 109 mm x 76.5 mm
Net weight	58 g
Weight including accessories	58 g
Gross weight	73 g
Environmental conditions	
Operating temperature	0 °C to 60 °C
Storage temperature	-25 °C to 70 °C
Certifications	
UL certification	yes
KC certification	yes

4 Deployment

4.1 Fast introduction

Max. SSI range

Limit	Valid range of values
Lower limit	0
Upper limit	4 294 967 295 (2^{31}-1)*
*) This value depends on the type of the encoder.	

Address areas

Input area

At CPU, PROFIBUS and PROFINET the input area is embedded to the corresponding address area.

IX - Index for access via CANopen

SX - Subindex for access via EtherCAT with Index 6000h + EtherCAT-Slot

More can be found in the according manual of your bus coupler.

Addr.	Name	Bytes	Function	IX	SX
+0	EV_I	4	Encoder value	5410h	01h
+4	C_US	2	16bit µs value	5411h	02h

Output area

No byte of the output area is used by the module.

Parameters

DS - Record set for access via CPU, PROFIBUS and PROFINET

IX - Index for access via CANopen

SX - Subindex for access via EtherCAT with Index 3100h + EtherCAT-Slot

More can be found in the according manual of your bus coupler.

Name	Bytes	Function	Default	DS	IX	SX
DIAG_EN	1	Diagnostic interrupt *	00h	00h	3100h	01h
IDLE	2	Pause time	0C00h	80h	3101h... 3102h	02h
BAUD	2	Transmission rate	0180h	80h	3103h... 3104h	03h
CRES	1	reserved	00h	80h	3105h	04h
NORM	1	Normalization	00h	80h	3106h	05h
LGTH	1	Bit length encoder data	18h	80h	3107h	06h
MODE	1	SSI mode	1Eh	80h	3108h	07h
CRES	3	reserved	00h	80h	3109h... 310Bh	08h

Name	Bytes	Function	Default	DS	IX	SX
SSI_EN	1	SSI function	00h	80h	310Ch	09h
*) This parameter may only be transferred at STOP state.						

Encoder evaluation

As soon as the module is adapted to the encoder and the parameter *SSI function* is activated, the module starts with sending the clock signal and evaluating the encoder values. The received values are stored in the input area.

4.2 In-/Output area

4.2.1 Input area 6byte

Input area

At CPU, PROFIBUS and PROFINET the input area is embedded to the corresponding address area.

IX - Index for access via CANopen

SX - Subindex for access via EtherCAT with Index 6000h + EtherCAT-Slot

More can be found in the according manual of your bus coupler.

Addr.	Name	Bytes	Function	IX	SX
+0	EV_I	4	Encoder value	5410h	01h
+4	C_US	2	16bit µs value	5411h	02h

Encoder value

Here the current encoder value as double word may always be found. If the SSI function is disabled the encoder value still remains.

With missing the power supply of the encoder the encoder value

F ... Fh as binary code respectively

A ... Ah as gray code is returned.

16bit µs value

In the SLIO module there is a 16bit timer (µs ticker). With PowerON the timer starts counting with 0. After 2^{16}-1µs the timer starts with 0 again.

At SSI module with each encoder value the value of the timer is stored as 16bit value in the input area. This timer value corresponds to the 1. active clock edge for the encoder and so to the time when the encoder value was stored in the output shift register of the encoder. On this way speed measuring may be realized.

If the µs value in the Listening mode remains constant, then the current encoder value is invalid.

Output area

No byte of the output area is used by the module.

4.3 Parameter data

Via parameterization you may define among others:

- Parameters of the SSI encoder (see data sheet of the encoder)
- Operating mode of the module (master mode/listening mode)
- Activation diagnostic interrupt

DS - Record set for access via CPU, PROFIBUS and PROFINET

IX - Index for access via CANopen

SX - Subindex for access via EtherCAT with Index 3100h + EtherCAT-Slot

More can be found in the according manual of your bus coupler.

Parameters

Name	Bytes	Function	Default	DS	IX	SX
DIAG_EN	1	Diagnostic interrupt *	00h	00h	3100h	01h
IDLE	2	Pause time	0C00h	80h	3101h... 3102h	02h
BAUD	2	Transmission rate	0180h	80h	3103h... 3104h	03h
CRES	1	reserved	00h	80h	3105h	04h
NORM	1	Normalization	00h	80h	3106h	05h
LGTH	1	Bit length encoder data	18h	80h	3107h	06h
MODE	1	SSI mode	1Eh	80h	3108h	07h
CRES	3	reserved	00h	80h	3109h... 310Bh	08h ... 0Ah
SSI_EN	1	SSI function	00h	80h	310Ch	0Bh

*) This parameter may only be transferred at STOP state.

DIAG_EN Diagnostic interrupt

Byte	Bit 7 ... 0
0	Diagnostic interrupt ■ 00h = disable ■ 40h = enable

- Here you activate res. de-activate the diagnostic function.

IDLE Pause

With *pause* also known as tbs (time between sends), you may indicate the waiting period, which is to be kept by the module between two encoder values, so that the encoder may preprocess his value. These data may be found in the data sheet of your encoder.

Range of values:

0030h = 1µs	0300h = 16µs
0060h = 2µs	0600h = 32µs

00C0h = 4µs	0900h = 48µs
0180h = 8µs	0C00h = 64µs
Other values are not allowed!	

BAUD Transmission rate

With the "listening mode" the transmission rate is irrelevant. Enter the transmission rate here. This corresponds the clock frequency to communicate with the connected encoder. These data may be found in the data sheet of your encoder.

Range of values:

0018h = 2MHz	0060h = 500kHz
0020h = 1.5MHz	00C0h = 250kHz
0030h = 1MHz	0180h = 125kHz
Other values are not allowed!	

NORM Normalization

Depending on the encoder besides the encoder value further bits were transferred. The number of bits, attached to the encoder value, may be removed by right-shifting the encoder value by means of the normalization. The normalization of the encoder value takes place via the module always after a possible gray-binary transformation. More about this may be found in the data sheet of your encoder.

Range of values:

00h ... 0Fh = 0bit ... 15bit

LGTH Bit length encoder data

Enter here the bit length of the encoder data. Depending on the encoder the encoder data consists of the current value with attached bits. Please enter here the whole length of the data. These data may be found in the data sheet of your encoder.

Range of values:

Hex	Bit	Hex	Bit	Hex	Bit
07	8	10	17	19	26
08	9	11	18	1A	27
09	10	12	19	1B	28
0A	11	13	20	1C	29
0B	12	14	21	1D	30
0C	13	15	22	1E	31
0D	14	16	23	1F	32
0E	15	17	24		
0F	16	18	25		
Other values are not allowed!					

MODE SSI mode

Byte	Bit 7 ... 0
0	■ Bit 1 ... 0: Operating mode ■ Bit 2: Shift direction ■ Bit 3: Edge clock signal ■ Bit 4: Code ■ Bit 7 ... 5: 0 (fix)

Operating mode

In the "listening mode" the module serves for listening the data exchange between SSI master and SSI encoder. Here the module receives the clock signal of the master and the data stream of the SSI encoder. With the operating mode "master mode" the module generates a clock signal for the encoder and receives his data stream.

Range of values:

01b = Listening mode

10b = Master mode

Shift direction

Please enter here the direction of the encoder data. These data may be found in the data sheet of your encoder. Normally the SSI encoder uses MSB first.

Range of values:

0 = LSB first (least significant bit is first transferred)

1 = MSB first (most significant bit is first transferred)

Edge clock signal

Here may be indicated with which edge type of the clock signal the encoder reacts to send data. These data may be found in the data sheet of your encoder. Normally the SSI encoder reacts with a rising edge of the clock signal.

Range of values:

0 = edge 1-0

1 = edge 0-1

Code

With "binary code" the received encoder value is not influenced. With "gray code" the received gray-coded value of the encoder is converted to a binary value. The gray code is a different form of binary code. The principle of the gray code is that two neighboring gray numbers will differ in exactly one single bit. When the gray code is used, transmission errors may be detected easily as neighboring characters may only be different in a single location. These data may be found in the data sheet of your encoder.

Range of values:

0 = binary code

1 = gray code

SSI_EN SSI function

By enabling the *SSI function* the module starts with sending the clock signal and with evaluating the encoder values. In the operating mode "listening mode" the module starts with evaluating the encoder values.

Range of values:

0 = disabled

1 = enabled

4.4 Operating modes

Overview

The module is a SSI interface module for direct connection to a SSI encoder. With a parameterization the module may be adapted to the corresponding SSI encoder. Here interrupts may be activated, which are released when reaching a comparison value respectively limit. The module has the following operating modes:

Master mode

In the "master mode" the module is directly connected to a SSI encoder. Here the SSI encoder is power supplied by the SSI interface. To get data from the module serves for a clock signal for the encoder and stores the received data stream in the process image.

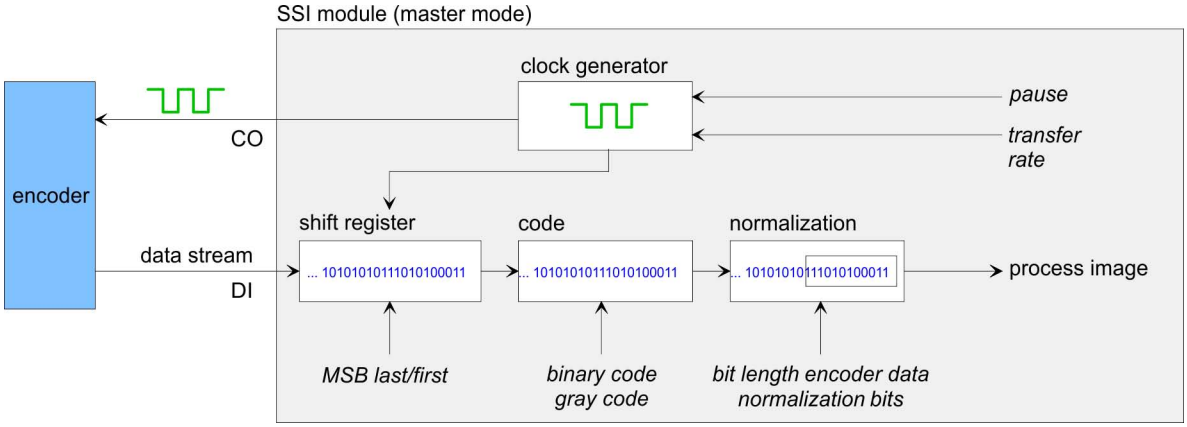

Listening mode

In the "listening mode" the module, which is listening is passive connected between SSI encoder and master module. For this operating mode the SSI encoder is to be power supplied by the master module. During operation the module listens to the signals of the SSI telegram and stores the received data stream in the process image. Even here the module is to be adapted to the corresponding counter by parameterization. The parameter *transfer* rate is not relevant.

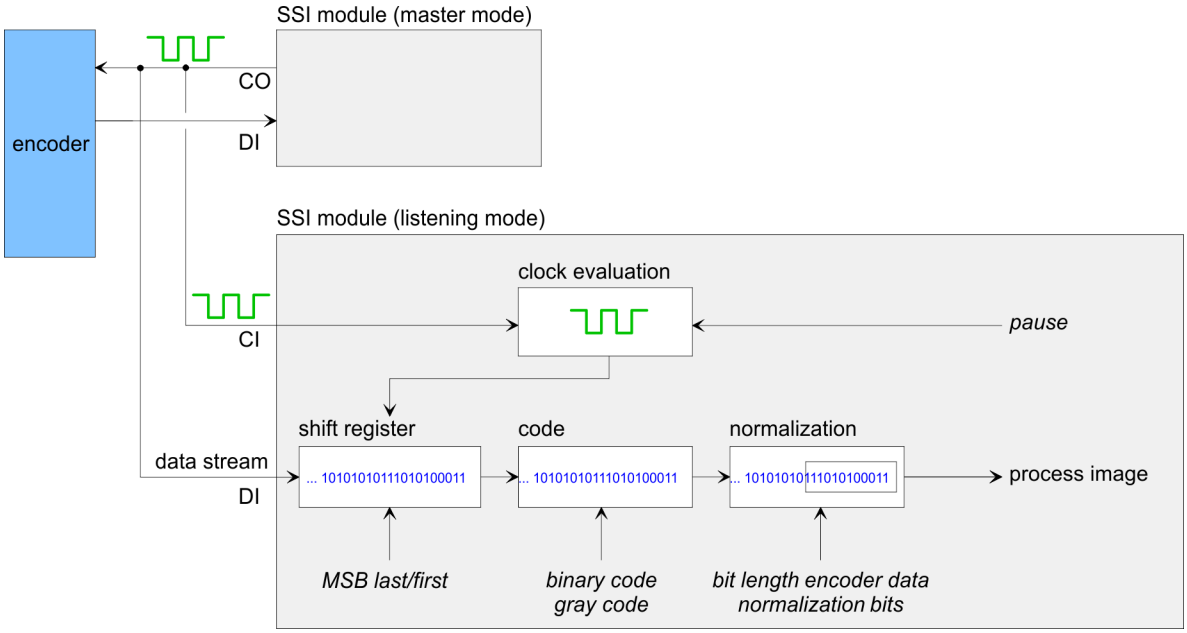

4.5 Diagnostics and interrupt

Overview

Via the parameterization you may activate a diagnostic interrupt for the module. With a diagnostic interrupt the module serves for diagnostic data for diagnostic interrupt$_{incoming}$. As soon as the reason for releasing a diagnostic interrupt is no longer present, the diagnostic interrupt^{going} automatically takes place. Within this time window (1. diagnostic interrupt$_{incoming}$ until last diagnostic interrupt$_{going}$) the MF-LED of the module is on.

Event	Process interrupt	Diagnostics interrupt	parameterizable
Encoder power supply is missing *	-	X	X

*) The module may only send a diagnostic interrupt in case of missing encoder power supply, if this received its parameters before. If the encoder power supply is already missing during startup, the module does not send an diagnostic interrupt!

Diagnostic data

DS - Record set for access via CPU, PROFIBUS and PROFINET. The access happens by DS 01h. Additionally the first 4 bytes may be accessed by DS 00h.

IX - Index for access via CANopen. The access happens by IX 2F01h. Additionally the first 4 bytes may be accessed by IX 2F00h.

SX - Subindex for access via EtherCAT with Index 5005h.

More can be found in the according manual of your bus coupler.

Name	Bytes	Function	Default	DS	IX	SX
ERR_A	1	Diagnostic	00h	01h	2F01h	02h
MODTYP	1	Module information	18h			03h
ERR_C	1	reserved	00h			04h
ERR_D	1	reserved	00h			05h
CHTYP	1	Channel type	76h			06h
NUMBIT	1	Number diagnostics bits per channel	08h			07h
NUMCH	1	Number channels of the module	01h			08h
CHERR	1	reserved	00h			09h
CH0ERR… CH7ERR	8	reserved	00h			0Ah ... 11h
DIAG_US	4	µs ticker	00h			13h

ERR_A Diagnostic

Byte	Bit 7 ... 0
0	■ Bit 0: set at module failure ■ Bit 1: set at internal error ■ Bit 2: set at external error ■ Bit 3: set at channel error ■ Bit 4: set at missing encoder power supply ■ Bit 7 ... 5: reserved

MODTYP Modul information

Byte	Bit 7 ... 0
0	■ Bit 3 ... 0: Module class – 1000b: Function module ■ Bit 4: set at channel information present ■ Bit 7 ... 5: reserved

ERR_C/D reserved

Byte	Bit 7 ... 0
0	reserved

CHTYP Channel type

Byte	Bit 7 ... 0
0	■ Bit 6 ... 0: Channel type – 76h: Counter module ■ Bit 7: reserved

NUMBIT Diagnostic bits

Byte	Bit 7 ... 0
0	Number of diagnostics bits of the module per channel (here 08h)

NUMCH Channels

Byte	Bit 7 ... 0
0	Number of channels of the module (here 01h)

CHERR reserved

Byte	Bit 7 ... 0
0	reserved

CH0ERR ... CH7ERR reserved

Byte	Bit 7 ... 0
0	reserved

DIAG_US µs ticker

Byte	Bit 7 ... 0
0 ... 3	Value of the µs ticker at the moment of the diagnostic